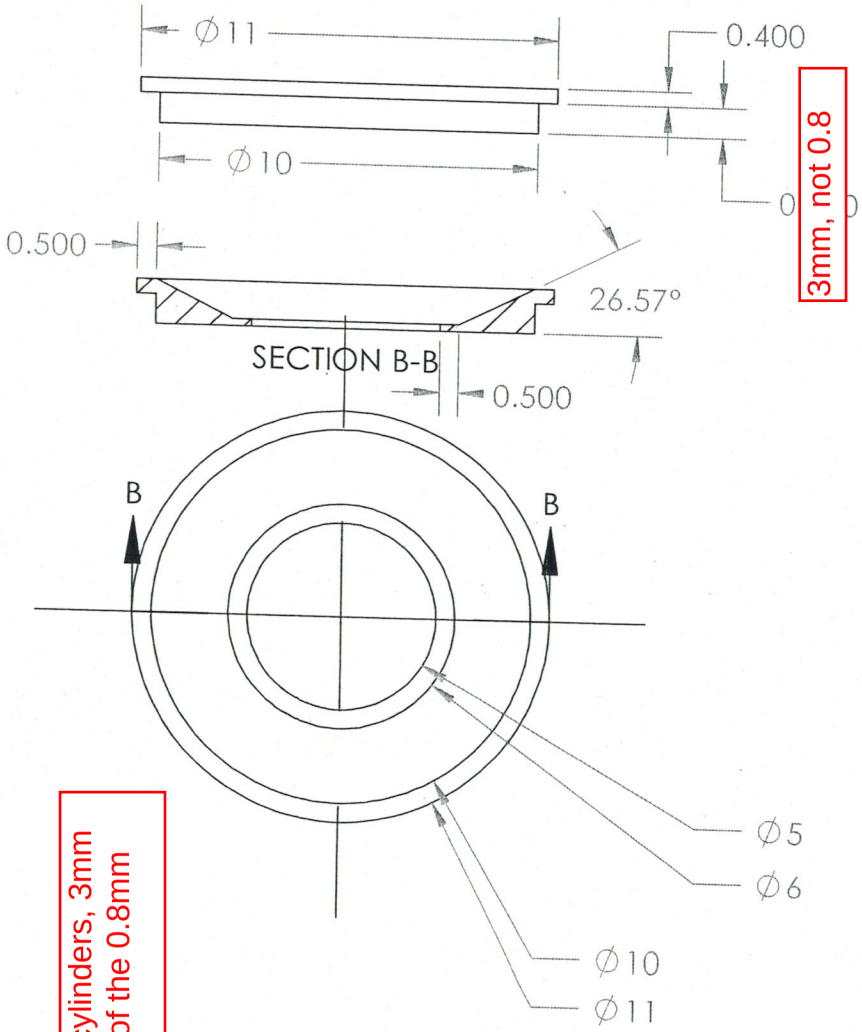

3mm, not 0.8

300 of these cylinders, 3mm deep instead of the 0.8mm

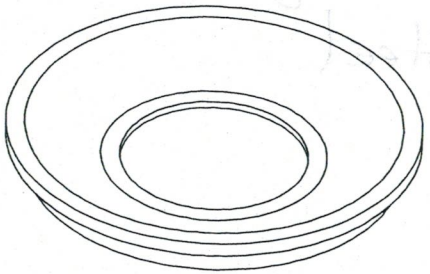

in mm

Stainless steel

		UNLESS OTHERWISE SPECIFIED:		NAME	DATE
		DIMENSIONS ARE IN ~~INCHES~~ mm TOLERANCES: FRACTIONAL ± ANGULAR: MACH ± BEND ± TWO PLACE DECIMAL ± THREE PLACE DECIMAL ±	DRAWN		
			CHECKED		TITLE:
			ENG APPR.		
			MFG APPR.		
		INTERPRET GEOMETRIC TOLERANCING PER:	Q.A.		
		MATERIAL	COMMENTS:		
		FINISH			
NEXT ASSY	USED ON				
APPLICATION		DO NOT SCALE DRAWING			

PROPRIETARY AND CONFIDENTIAL
SolidWorks Student License
Academic Use Only
ANY REPRODUCTION IN PART OR AS A WHOLE WITHOUT THE WRITTEN PERMISSION OF <INSERT COMPANY NAME HERE> IS PROHIBITED.

SIZE DWG. NO. REV
A Adplt_Hole5mm

SCALE: 5:1 WEIGHT: SHEET 1 OF 1

5 4 3 2 1

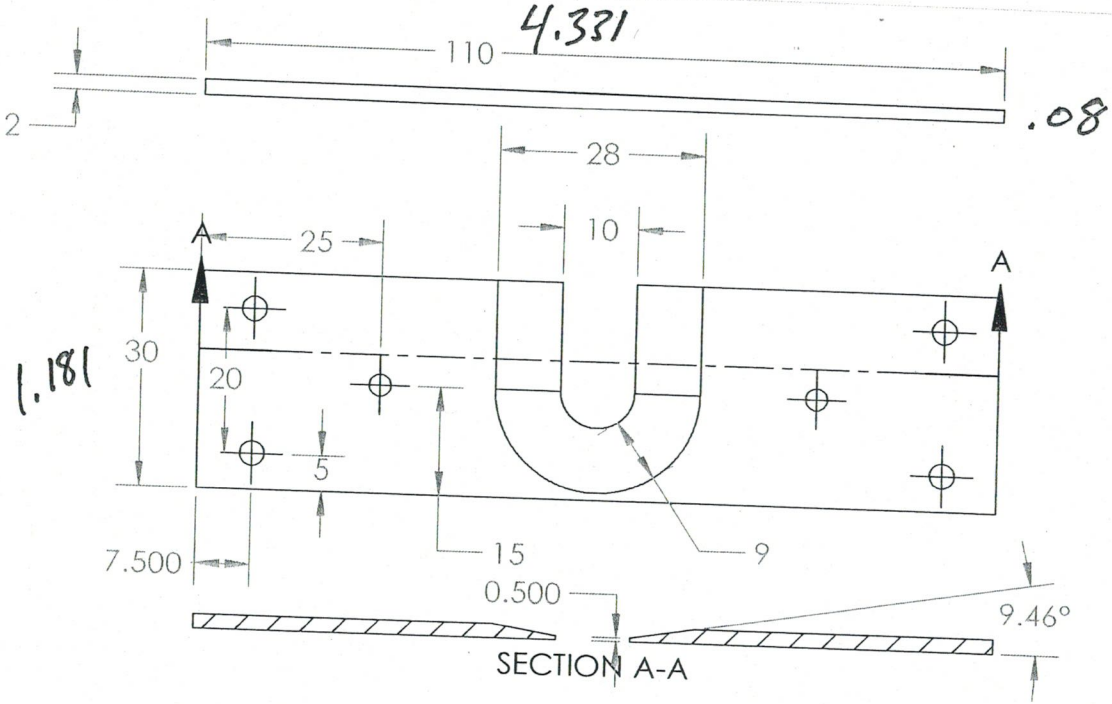

1x

~~Alum~~

Stainless

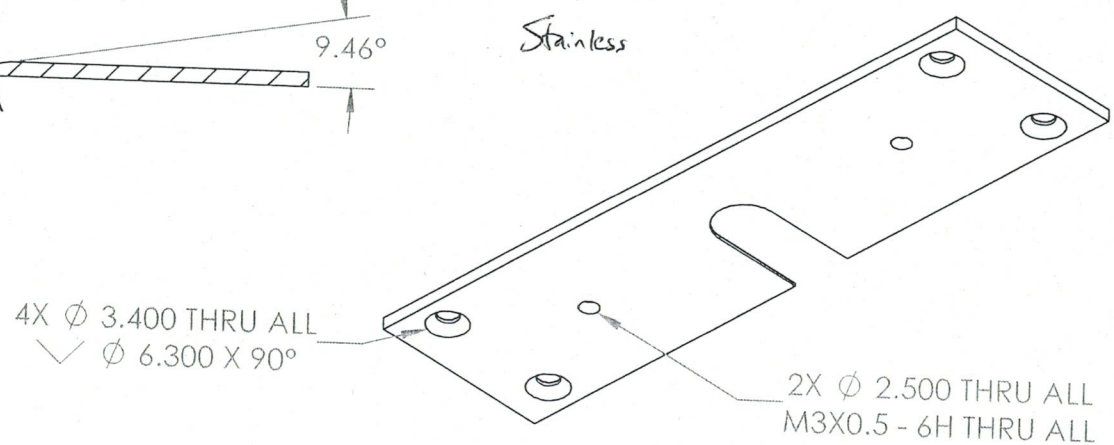

5 of these

		UNLESS OTHERWISE SPECIFIED:		NAME	DATE
		DIMENSIONS ARE IN INCHES TOLERANCES: FRACTIONAL ± ANGULAR: MACH ± BEND ± TWO PLACE DECIMAL ± THREE PLACE DECIMAL ±	DRAWN		
			CHECKED		
			ENG APPR.		
			MFG APPR.		
		INTERPRET GEOMETRIC TOLERANCING PER:	Q.A.		
		MATERIAL	COMMENTS:		
		FINISH			
		DO NOT SCALE DRAWING			

SPENCER SMITH

TITLE: 966-2349
5-59695 Neurosci center

PROPRIETARY AND CONFIDENTIAL

SolidWorks Student License
Academic Use Only

THIS DRAWING IS A WHOLE
WITHOUT THE WRITTEN PERMISSION OF
<INSERT COMPANY NAME HERE> IS
PROHIBITED.

NEXT ASSY	USED ON
APPLICATION	

SIZE A DWG. NO. Original_holderbottom REV

SCALE: 1:1 WEIGHT: SHEET 1 OF 1

5 4 3 2 1

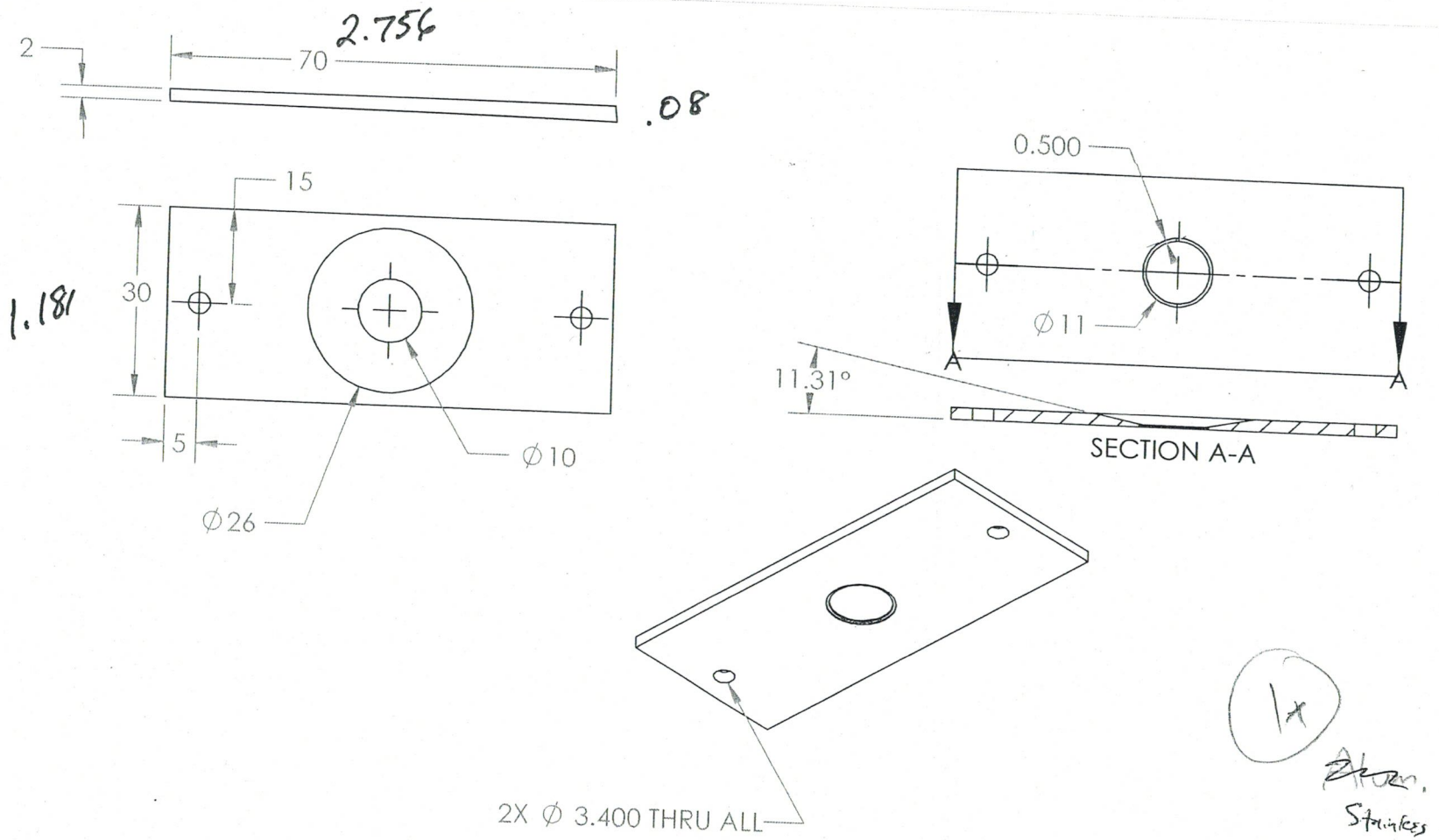

5 of these

		UNLESS OTHERWISE SPECIFIED:		NAME	DATE	
		DIMENSIONS ARE IN INCHES TOLERANCES: FRACTIONAL ± ANGULAR: MACH ± BEND ± TWO PLACE DECIMAL ± THREE PLACE DECIMAL ±	DRAWN			SPENCER SMITH
			CHECKED			TITLE: 966-2349
			ENG APPR.			
			MFG APPR.			5-59695 Neurosi: Ca-tes
		INTERPRET GEOMETRIC TOLERANCING PER:	Q.A.			
		MATERIAL	COMMENTS:			
NEXT ASSY	USED ON	FINISH				SIZE DWG. NO. REV
APPLICATION		DO NOT SCALE DRAWING				Original_holdertop
						SCALE: 1:1 WEIGHT: SHEET 1 OF 1

PROPRIETARY AND CONFIDENTIAL
THIS DRAWING IS A WHOLE
WITHOUT THE WRITTEN PERMISSION OF
<INSERT COMPANY NAME HERE> IS
PROHIBITED.

SolidWorks Student License
Academic Use Only

5 4 3 2 1

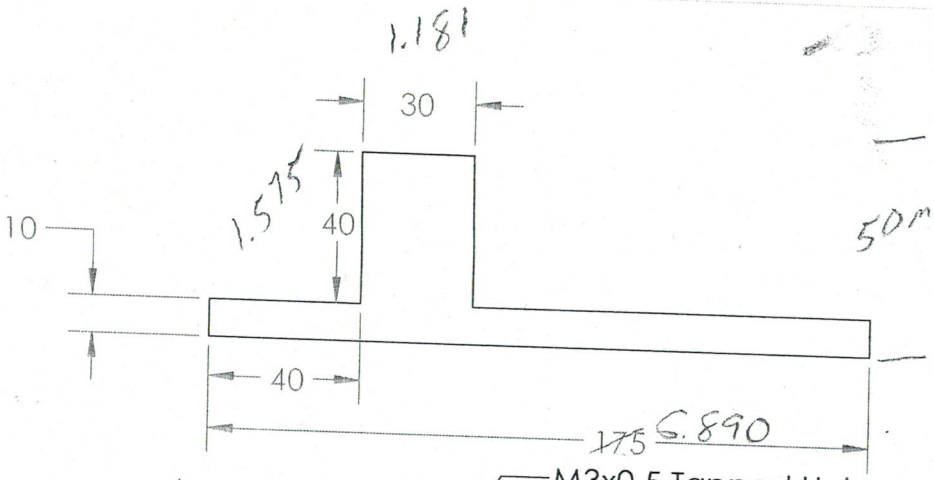

① X1.772 Y-.2947

② X 2.559 Y-.2947

③ X 1.772 Y-4.0363

④ X 2.559 Y-4.0363

50m 1.969

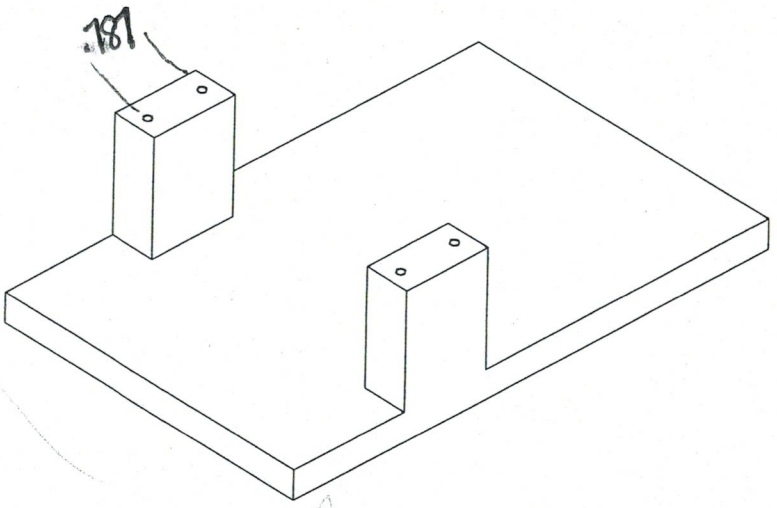

in mm

Al

1x

1.772

2.559

5 of these

		UNLESS OTHERWISE SPECIFIED:		NAME	DATE
		DIMENSIONS ARE IN INCHES TOLERANCES: FRACTIONAL ± ANGULAR: MACH ± BEND ± TWO PLACE DECIMAL ± THREE PLACE DECIMAL ±	DRAWN		
			CHECKED		
			ENG APPR.		
			MFG APPR.		
		INTERPRET GEOMETRIC TOLERANCING PER:	Q.A.		
		MATERIAL	COMMENTS:		
NEXT ASSY	USED ON	FINISH			
APPLICATION		DO NOT SCALE DRAWING			

TITLE:

PROPRIETARY AND CONFIDENTIAL
SolidWorks Student License
Academic Use Only
ANY REPRODUCTION IN PART OR AS A WHOLE WITHOUT THE WRITTEN PERMISSION OF <INSERT COMPANY NAME HERE> IS PROHIBITED.

SIZE DWG. NO. REV

A Stareotax_base_v1

SCALE: 1:2 WEIGHT: SHEET 1 OF 1

5 4 3 2 1